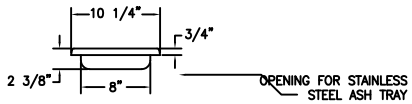

8" DIA. INSIDE ASH TRAY

ITEM NO 8

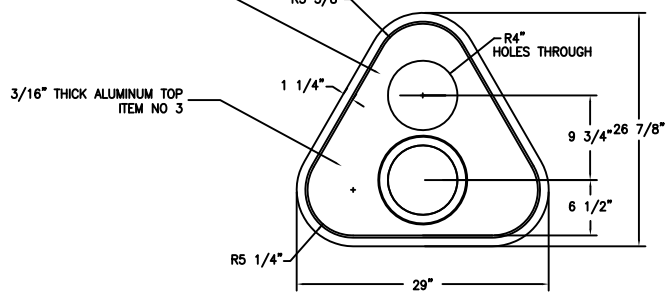

TOP VIEW WASTE CONTAINER

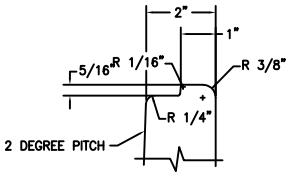

DETAIL TOP LIP

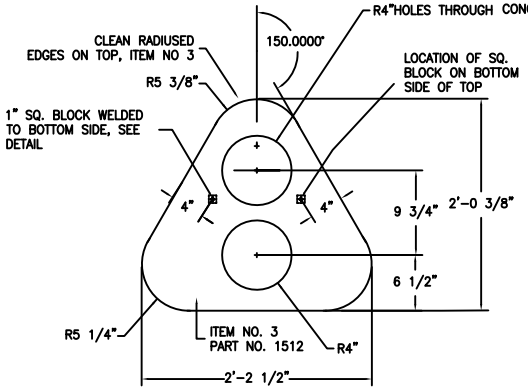

TOP VIEW

END VIEW

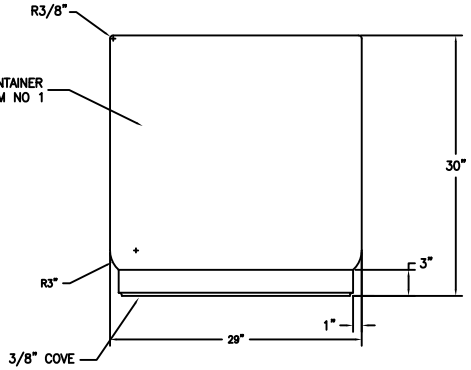

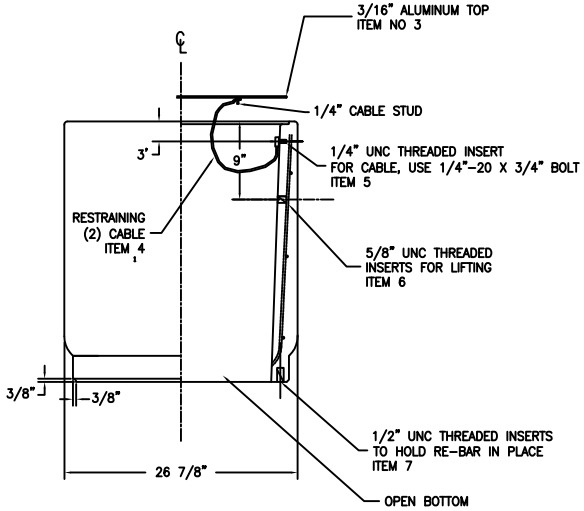

SIDE & SECTION VIEW WASTE CONTAINER

NOTE: ONE CABLE (ITEM NO. 4) TO THE TOP LID AND THE OTHER CABLE TO THE STAINLESS STEEL SNUFFER PAN.

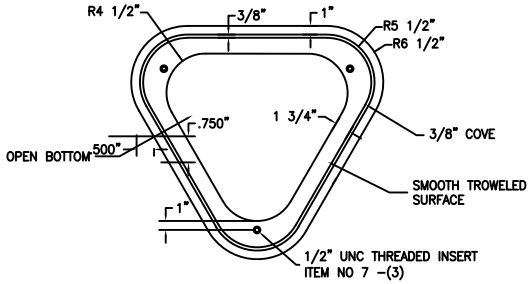

BOTTOM VIEW WASTE CONTAINER

WAUSAU TILE SITE FURNISHINGS

P.O. BOX 1520 WAUSAU, WISCONSIN 54402-1520 800/388-6728
P.O. BOX 967 SANANAC, CALIFORNIA 92220 800/228-4838

REVISIONS						DRAWN BY L.BE	JOB	MATERIAL
NO.	DATE	BY	NO.	DATE	BY	TITLE	JOB NO.	WEIGHT
1			4			SCALE	UNLESS OTHERWISE SPECIFIED DIMENSIONS ARE IN INCHES ANGLES ±0.5° 2 PL ±0.01 3 PL ±0.005	DATE / FINISH OPTIONS
2			5			CHECKED		DWG. NO. TF1232
3			6					